Exam Date & Time: 03-Jul-2023 (09:30 AM - 12:30 PM)

MANIPAL ACADEMY OF HIGHER EDUCATION

SECOND SEMESTER B.TECH. DEGREE EXAMINATIONS - JUNE/JULY 2023
SUBJECT: ELE 1071-CHM/ELE 1071-B/ELE 1051-B - BASIC ELECTRICAL TECHNOLOGY (MAKEUP)

BASIC ELECTRICAL TECHNOLOGY [ELE 1071-CHM]

Marks: 50 **Duration: 180 mins.**

A

Answer all the questions.

1A) Determine the input resistance between terminals **P** & **Q** of the given network. (3)

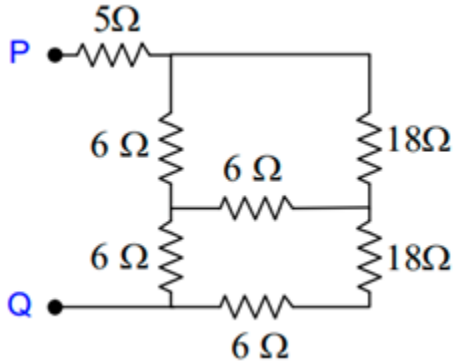

1B) In the circuit shown, determine the mesh currents $\mathbf{i_1}$, $\mathbf{i_2}$ and i_3. (3)

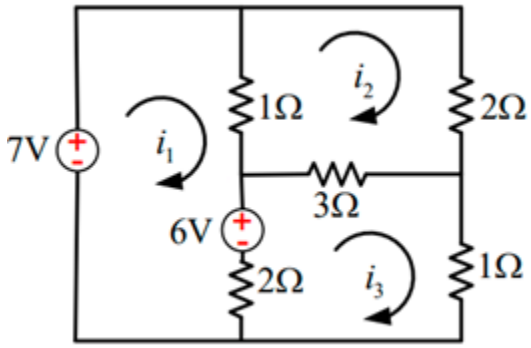

1C) For the given network, determine the current through the resistance **10 Ω** connected between points **a** & **b** using **Thevenin's** theorem. (4)

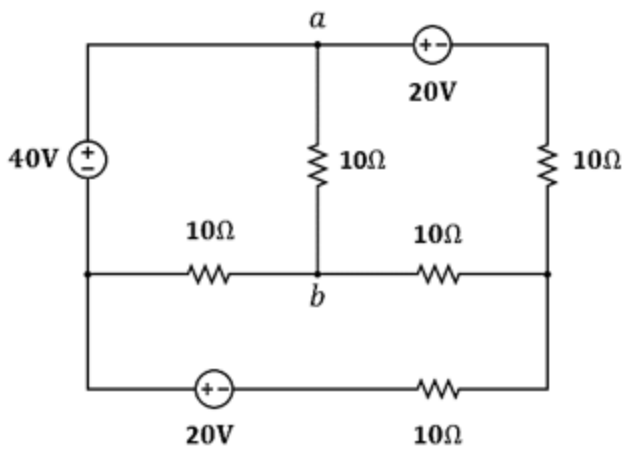

2A) A DC supply voltage of **100 V** is applied across a relaxed series **R-C** circuit with **C = 5 μF** at the time **t = 0 s**. Find the value of resistance **R** such that the voltage across the capacitor becomes **50 V** in **5 ms** after the circuit is switched on. If the series **R-C** circuit is shorted at **5 ms**, what is the capacitor voltage at **t = 7 ms**? (3)

2B) The iron ring as shown is made up of three sections **A, B** and **C** having a relative permeability of **1000** and has a flux density of **1.8 Tesla** in the air gap. For the given dimensions of $\mathbf{l_1 = 0.15\ m}$, $\mathbf{l_2 = 0.2\ m}$, $\mathbf{l_3 = 0.2\ m}$, $\mathbf{l_{ag} = 1\ cm}$, $\mathbf{A1 = A_3 = A_{ag} = 2 \times 10^{-4}\ m^2}$, and $\mathbf{A_2 = 3 \times 10^{-4}\ m^2}$, if the number of turns is **11000**, Compute the current through the coil.

(Absolute permeability of air $= 4\pi \times 10^{-7}$ H/m)

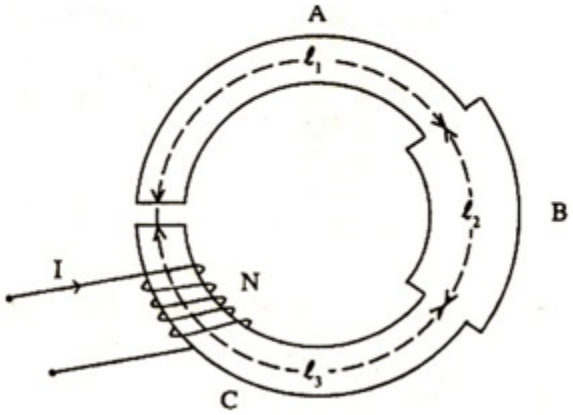

(4)

2C) There are two inductive coils connected in series in such a way that the net inductance is **2.2 H**. When their connections are reversed the total inductance changes to **0.95 H**. Find the self-inductances of the two coils. The coefficient of coupling between them is **0.4**. (3)

3A) Determine the **RMS** value of the following signal. (3)

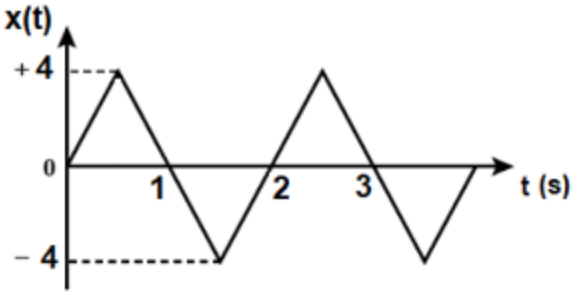

3B) For the given parallel AC circuit, find the total current, power factor and active, reactive & apparent powers.

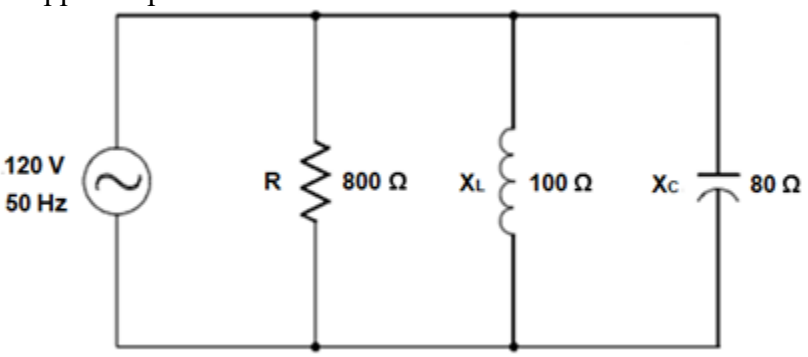

(3)

3C) A circuit consists of a pure resistor, a pure inductor, and a capacitor connected in series as shown below. When the circuit is supplied with **100 V**, **50 Hz** supply, the voltages across inductor and resistor are **240 V** and **90 V** respectively. If the circuit takes a **10 A** leading current, calculate (a) value of inductance, resistance, and capacitance, (b) power factor of the circuit, and (c) voltage across the capacitor.

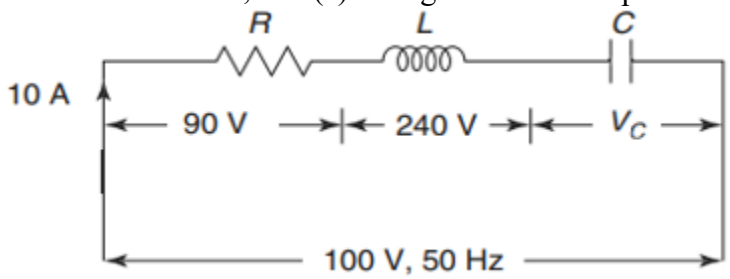

(4)

4A) A **1-Φ** motor takes **12 A** at a power factor of **0.5** lagging from a **240 V**, **50 Hz** supply. What value must a shunting capacitor have to raise the power factor to **0.9** lagging? Obtain the line current for the new power factor. (4)

4B) Three similar coils, each of resistance **7 Ω** and inductance **0.03 H**, are connected in **delta** to a **400 V**, **3-Φ**, **50 Hz**, **RYB** system. Assuming $\mathbf{V_{RY}}$ as the reference voltage phasor, calculate a) line currents and b) active, reactive, and complex powers. (6)

5A) The phase of a lightly loaded **3-Φ**, **450 V**, **Δ** connected motor draws a current of **13.86 A** at a power factor of **0.47** lagging. The two-wattmeter method is used to measure the **3-Φ** power supplied to the motor.
i) What would each wattmeter read?
ii) Determine the active and reactive power using wattmeter readings. (4)

5B) Discuss the function and utility of an electrical substation. List out the major substation components. (3)

5C) Explain the working principle of a 3-phase induction motor. List their classification. (3)

-----End-----